OWNERS OPERATING MANUAL and PARTS LIST

MODEL 2340-1
22 INCH
SELF-PROPELLED
ROTARY MOWER

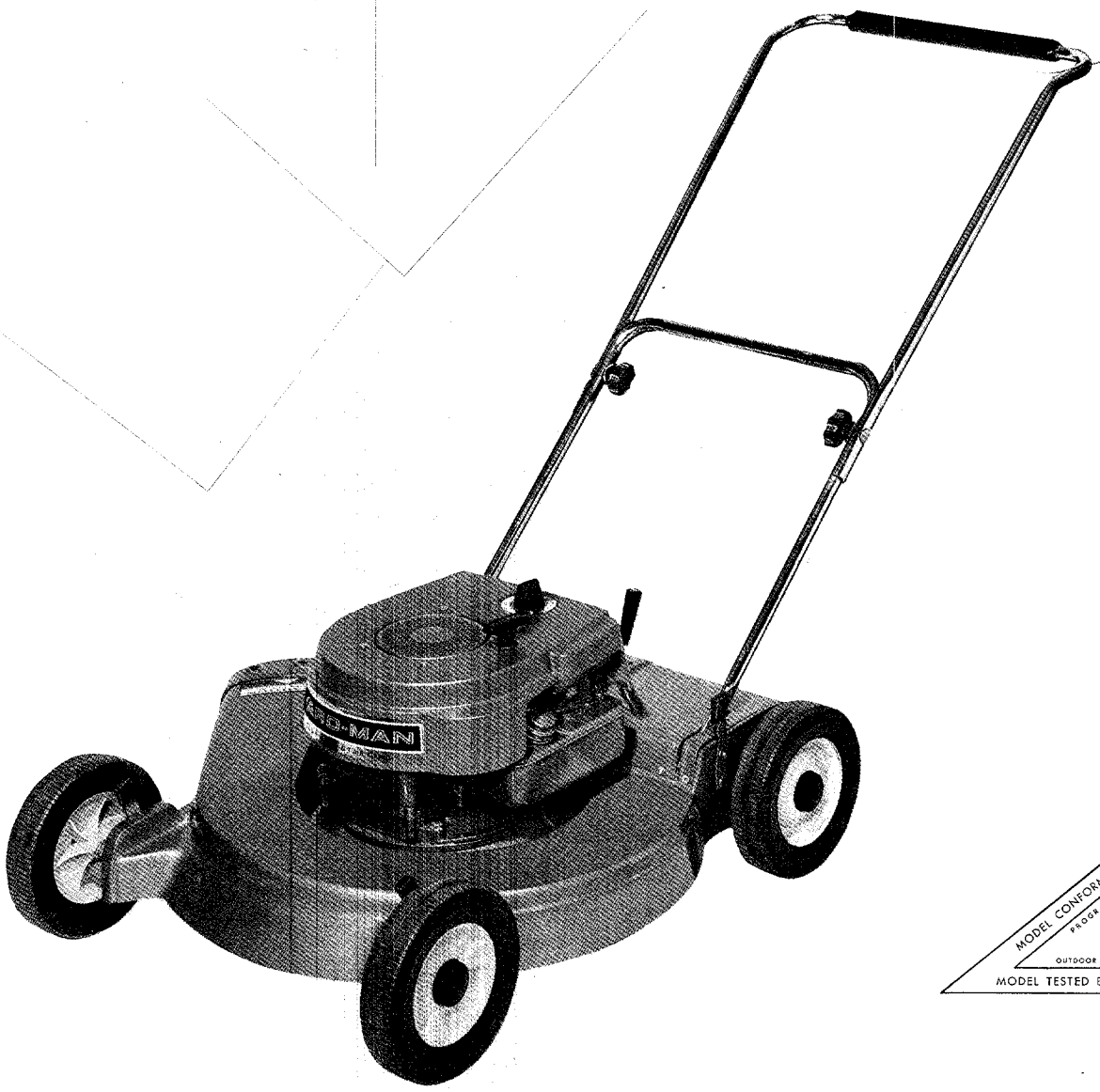

MODEL CONFORMS TO SAFETY STANDARDS PROGRAM SPONSORED BY OPEI OUTDOOR POWER EQUIPMENT INSTITUTE

MODEL TESTED BY INDEPENDENT LABORATORY

0611-693

PRINTED IN U.S.A.

YARD-MAN

Jackson Michigan

RULES FOR SAFE OPERATION

Your rotary mower is a precision piece of power equipment. Engineering skill and experience have been combined to provide the ultimate in safety and efficiency, however, as with any type of power equipment, carelessness or error on the part of the operator can result in injury. Exercise extreme caution at all times.

1. **KNOW YOUR MACHINE** Read the Owner's Manual carefully - learn how to operate your mower properly.

2. **MAKE SURE THE LAWN IS CLEAR** of sticks, stones, wire and other hazardous items from lawn before mowing. Such items are dangerous to both the mower and individuals in the vicinity of the mower.

3. **ADD FUEL** before starting engine - - - never when engine is hot or running.

4. **ALWAYS STOP ENGINE** (turn off switch or disconnect sparkplug wire) before attempting any repairs or adjustments.

5. **START ENGINE CAREFULLY** Always stand at side opposite discharge chute. **NEVER PLACE HANDS OR FEET UNDER THE MOWER OR NEAR THE DISCHARGE CHUTE WHILE THE ENGINE IS RUNNING.**

6. **DO NOT TILT MOWER** at extreme angle while engine is running. Cut grass on hills and banks sideways.

7. **STOP THE ENGINE** when not cutting grass.

8. **DO NOT ALLOW MINORS** to operate mower unless thoroughly instructed and and properly supervised.

9. **KEEP CHILDREN AND PETS AWAY** from area at all times during mowing operation.

10. **ALWAYS CHECK FOR DAMAGE** If you should strike some foreign object while mowing, stop your mower. Inspect for and repair any damage before restarting and operating the mower.

11. **DISENGAGE ALL BLADE AND DRIVE CLUTCHES** before starting units so equipped. Do not attempt to start engine while mower is resting in high grass.

LAWN CARE:

1. It is not advisable to cut off more than 1/3 of the total length of the grass at any one mowing.
2. When mowing thick, lush wet grass, start at outside of lawn and mow in counter-clockwise direction to prevent mower from recutting clippings from previous rounds.
3. When mowing thin or dry grass, start at outside of lawn and mow in clockwise direction to progressively discharge clippings to center of lawn where they can easily be removed.
4. Recommended normal cutting heights for different types of grass:

1½ to 2½	— Med. to Med. High	Marion blue grass
1½ to 2½	— Med. to Med. High	Kentucky blue grass
1 to 2	— Med. - Low to Med.	Fescues
1 to 2	— Med. - Low to Med.	Rye grass
1 to 1½	— Low to Med. Low.	Bermuda
1 to 1½	— Low to Med. Low.	Zoysia
1 to 2	— Med. - Low to Med.	Bent grass

SUGGESTIONS FOR MORE EFFICIENT, AND MAINTENANCE-FREE OPERATION

GENERAL MOWING

1. Always keep mower blade "Knife" sharp and balanced for maximum cutting efficiency.
2. Always start engine with mower on level surface where blade will not drag on tall grass or other obstructions. After starting, let engine warm up several minutes at slow speed before starting to mow.
3. When mowing under normal conditions, run mower at ½ to ¾ throttle for best results.
4. When cutting tall heavy growth, or on rough ground, place mower in highest cut position and gradually reduce to desired cutting height over course of two or three mowings.

USING GRASS CATCHER

1. When using grass catcher, operate mower engine at ¾ to full throttle.
2. In heavy dense turf, set cutting height in medium to high position.
3. Allow wet grass to dry before attempting to mow with grass catcher attached.
4. Empty catcher bag thoroughly before storage.

MAINTENANCE

Your mower like all machines with moving parts must receive care and maintenance. The following tips, if used, will contribute many trouble-free hours to your mower.

1. Check oil level frequently. When changing oil, make sure dirt and debris is cleaned off oil sump before removing oil plug.
2. Keep mower clean, especially the engine and underside of mower housing.
3. Check all nuts, bolts and screws occasionally to be sure mower is in good operating condition.
4. Should excessive vibration develop, check your blade and crankshaft immediately. Do not operate mower with an unbalanced blade, a damaged blade or a damaged crankshaft.
5. The wheel bearings are pre-lubricated at the factory and should require no further attention until mower is serviced. However, it is advisable to remove the wheels and apply a small amount of light oil to each axle, at least once a season.
6. If you are going to store your mower for any length of time (30 days or longer) it is important that the following steps be taken:
   a. Drain the gas tank. Start the engine and allow it to run out of gas. Gasoline left in the engine will leave gum deposits in the carburetor and gas tank.
   b. Clean engine of all foreign matter.
   c. Lubricate cylinder by removing the spark plug and pouring one ounce of clean lubricating oil through the spark plug hole into the cylinder. Crank engine slowly to spread oil and replace spark plug. To start after storage remove spark plug and rotate engine with starter to remove excess oil.
7. Just as your automobile needs professional mechanical maintenance from time to time, so does your air cooled engine. A yearly tune-up and check by a qualified Service Center is recommended to avoid breakdowns and unnecessary delays during the cutting season.

SET UP

Your mower is shipped in one carton completely assembled with the handle assembly in the shipping or storage position. To remove your mower from the carton, slit the end of the carton and roll the mower out. DO NOT attempt to lift the unit by the engine shroud.

To place the handle in operating position, press the up-stop lever to release the handle then lift the handle assembly until the lower section snaps into the operating position as shown. The upper section can now be fitted into place. Fasten the upper and lower sections together with the handle mounting knobs.

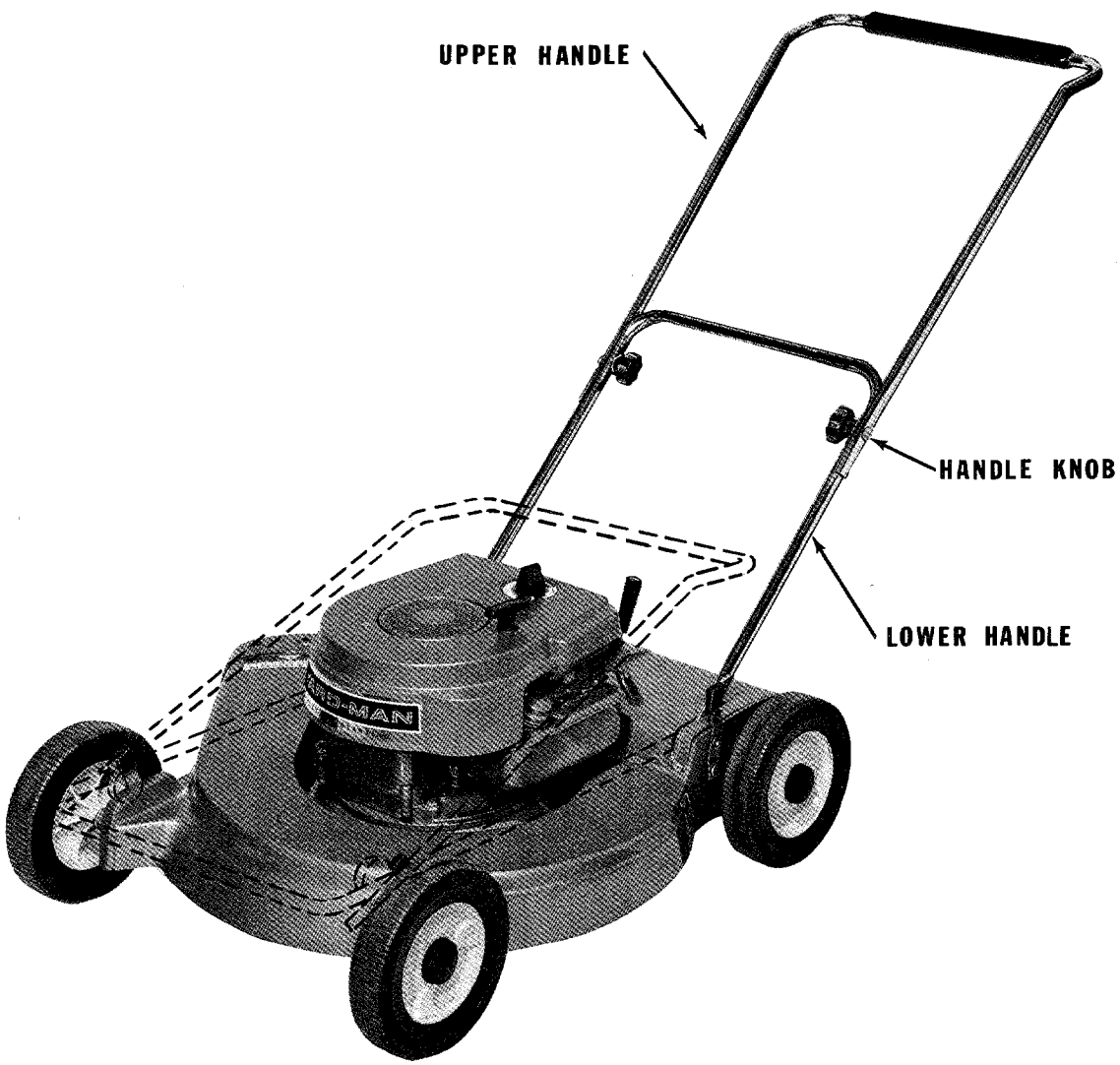

BEFORE STARTING ENGINE

Remove oil fill plug and fill the crankcase with S.A.E. No. 30 oil. (1¼ pints approx.)

Fill fuel tank completely full with a good grade regular clean, fresh gasoline. DO NOT MIX OIL WITH GASOLINE. FOR COMPLETE ENGINE INFORMATION, READ ENGINE INSTRUCTION BOOKLET BEFORE STARTING ENGINE.

TO START ENGINE

1. Place throttle control knob in FAST or RUN position.
2. While standing at the left side of the mower, opposite the discharge chute, pull the starter rope with a quick full stroke. Repeat if necessary.
3. When engine starts, move throttle control knob to slow speed until engine warms up.

NOTE: If engine floods, place throttle control knob in "Stop Position." Pull starter rope at least 4 times. This will clear the engine of excess gas. Then reposition control lever to "Run" position and follow the normal starting procedure.

Engine flooding is usually caused by a dirty air cleaner. Service air cleaner regularly as noted in engine instruction manual.

If engine continues to flood even with a clean air filter, lean carburetor adjustment screw 1/8 turn. (See engine instructions)

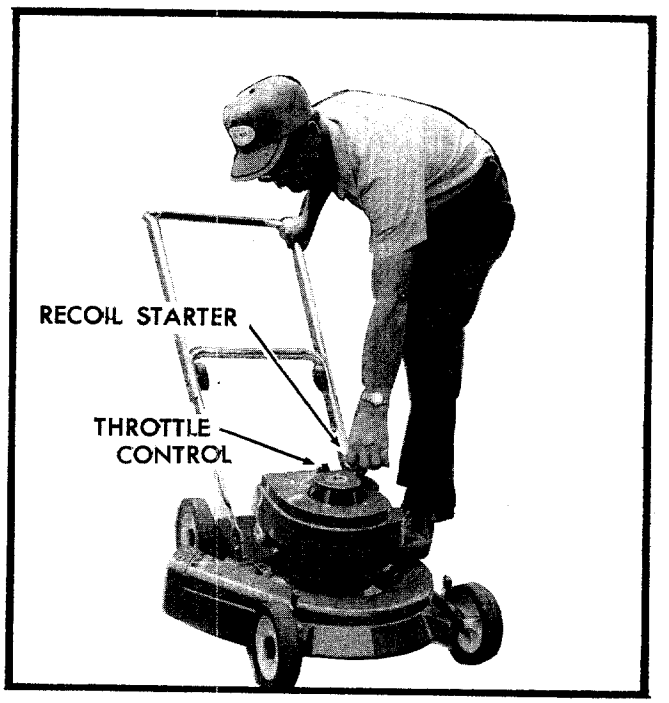

OPERATING INSTRUCTIONS

This mower is constructed with a "Dead Man" handle. When the handle is down the drive unit is in neutral, when the handle is up the drive (self-propelling) unit is engaged. TO PROPEL THE MOWER FORWARD, simply raise the handle—TO STOP THE MOWER, lower the handle.

CAUTION: The blade is moving whenever the engine is running. Never place your hands or feet in the discharge opening or under the blade housing while the engine is running.

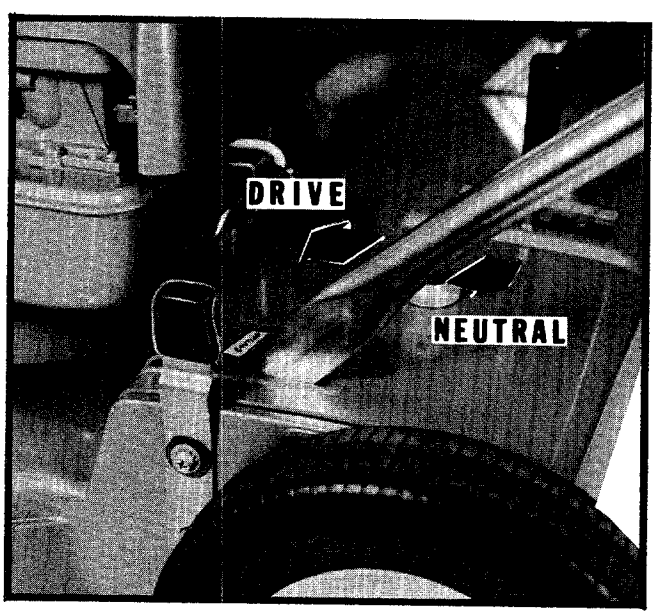

BREAK-IN PERIOD

During the first ten hours of operation, check the following items frequently:

Oil Level
All nuts, bolts and screws for tightness
Condition of Blade

TO CHANGE OIL

Engine oil should be changed after the first 5 hours of operation and each 25 hours of operation thereafter.

Drain oil while engine is warm. Disconnect spark plug wire and secure at least 1" away from spark plug. Block right hand side of mower up about 4" high and set shallow one quart container beneath oil drain. Remove oil drain plug from sump and allow oil to drain completely. Replace plug and refill with S.A.E. #30 oil. (1¼ pints approx.)

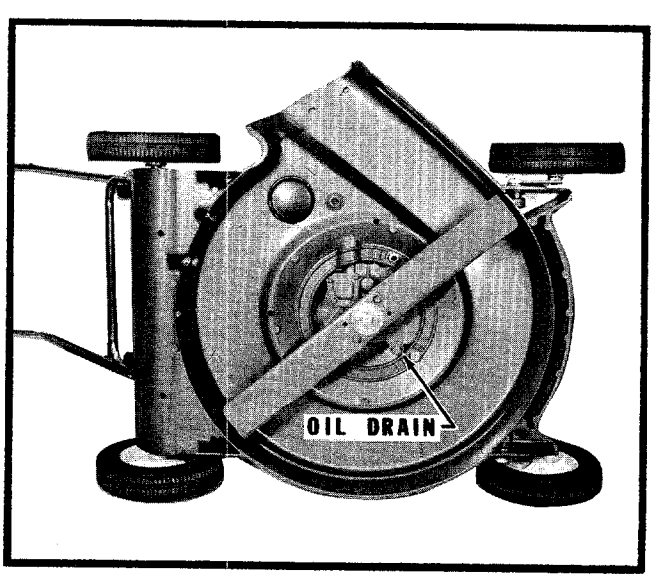

MODEL 2340-1

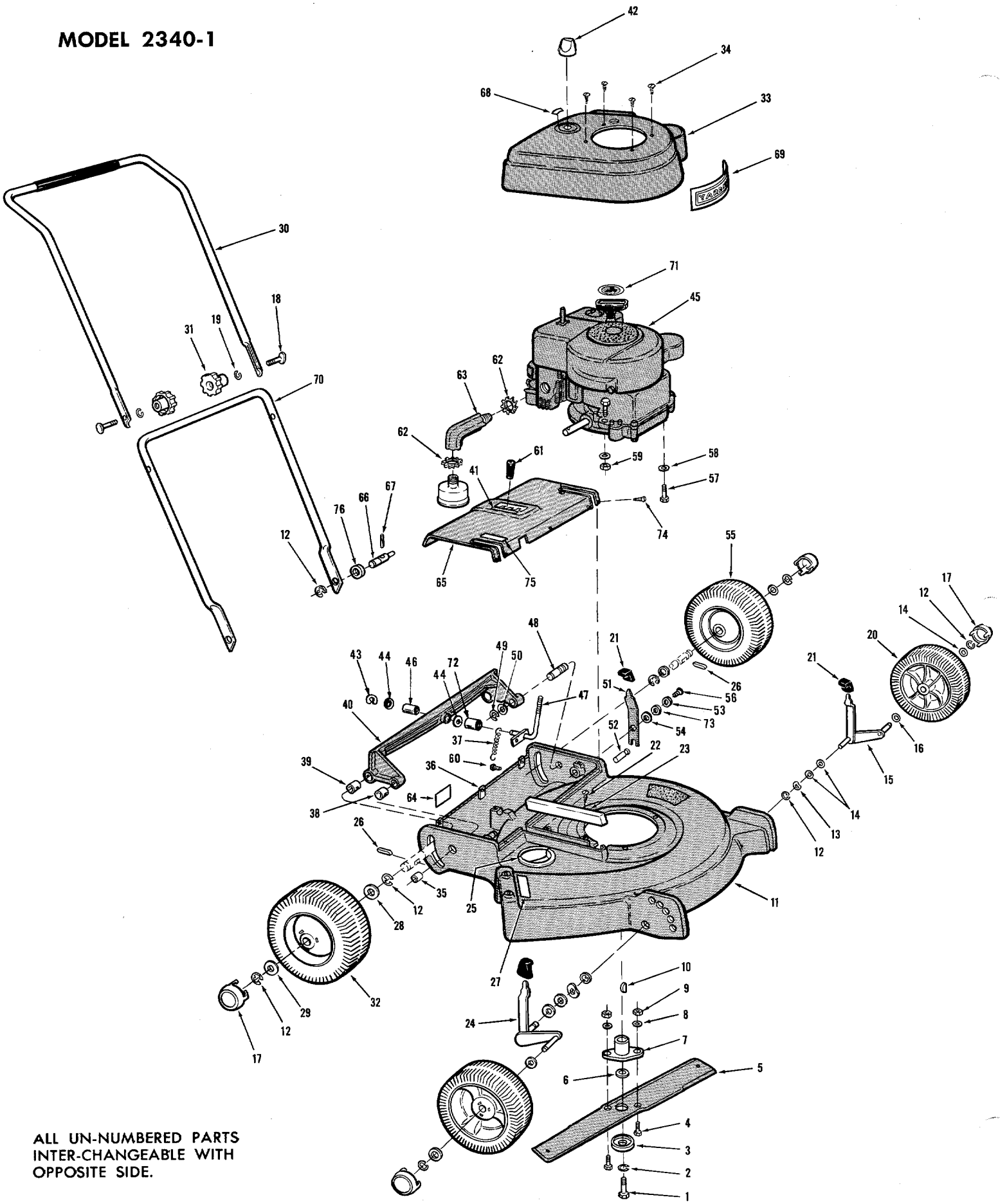

ALL UN-NUMBERED PARTS INTER-CHANGEABLE WITH OPPOSITE SIDE.

For Parts List—See Pg. 7

PARTS LIST

MODEL 2340-1

Your Mower is right hand (R.H.) or left hand (L.H.) as you Mow.

REF. NO.	PART NO.	NAME OF PART
1	1509-101	Bolt (⅜-24 x 1⅛ Hex Hd. Lock)
2	1542-8	*Lockwasher (⅜ Split)
3	1543-39	Washer—Special
4	1509-34	*Bolt (¼-20 x ¾ Hex Hd.)
5	3604-40	Blade—Grass
6	1624-135	Washer (⅜ x 1 x .210)
7	1143-5	Ass'y—Blade Adaptor
8	1018	*Lockwasher (¼ Split)
9	1538-8	Locknut (¼-20 Hex Hd.)
10	1646-8	Key (#6 Woodruff)
11	6601-144-55	Blade Housing
12	1650-1	Retaining Ring
13	1552-2	Washer—Wave
14	1540-90	*Washer (½ x 1 x 1/32)
15	2123-32	Ass'y—Axle (L.H.)
16	1540-86	*Washer (½ x 1 x ⅛)
17	2674-39	Hub Cap
18	1513-103	Bolt (5/16-18 x 1¾ Special)
19	1025	*Washer (5/16 Split)
20	2108-187-41	Ass'y—Wheel & Tire 8 x 1.75)
21	2643-43	Knob—Height Adjust
22	1117	Screw (10-32 Thd. Cutting)
23	2639-56-55	Chain Guard
24	2123-33	Ass'y—Axle (R.H.)
25	2556-20-55	Muffler Deflector
26	323	Pawl
27	1616-343	Label—A.S.A.
28	1540-22	*Washer (19/32 x 1¼ x 1/16)
29	1540-17	*Washer (19/32 x 15/16 x 1/16)
30	2117-86-01	Ass'y—Upper Handle
31	1643-47	Knob—Handle
32	1108-176-41	Ass'y—Wheel & Tire R.H. (8 x 1.75)
33	3699-92-55	Shroud—Engine
34	1526-1	*Screw (#8-½ Phillips Hd.)
35	1652-96	Sleeve Bearing (Bronze)
36	1539-78	Special Nut
37	1642-105	Height Adjust Spring
38	1652-105	Sleeve Bearing (Bronze)
39	1652-104	Sleeve Bearing
40	1132-101	Ass'y—Bracket & Bearings
41	1616-410	Label—Height of Cut
42	2643-44	Knob—Throttle
43	1650-10	Retaining Ring
44	1540-43	Washer (21/64 x 15/16 x 1/32)
45		Ass'y—Engine Briggs & Stratton Model 92988—Type 1032-03
46	1652-120	Bearing
47	1155-23	Ass'y—Lever & Bracket
48	1547-46	Pivot Pin
49	1650-44	Retaining Ring
50	1540-25	*Washer (7/16 x 1 x 1/32)
51	1705-35	Lever—Upstop
52	1547-48	Pin—Upstop
53	1540-70	Washer—Flat (.23 x ½ x .60)
54	1543-58	Washer—Rubber
55	1108-177-41	Ass'y—Wheel & Tire L.H. (8 x 1.75)
56	41-054	Screw (10-32 x 9/16 Ph. Hd.)
57	1509-75	*Bolt (5/16-18 x 1½ Hex Hd.)
58	159	Washer (21/64 x 5/8 x 1/16)
59	1538-6	*Nut (5/16-18 Hex Lock)
60	1545-11	Clevis Pin
61	1643-49	Knob—Height Adjust
62	1539-67	Conduit Nut
63	2610-23	Adaptor—Muffler
64	1605-554	Name Plate
65	1118-52-55	Ass'y—Cover Plate
66	1547-45	Handle Pin
67	1548-15	Rollpin
68	1616-297	Label—Throttle
69	2616-434	Label (Yard-Man)
70	1117-85-01	Ass'y—Lower Handle
71	42072	Label—Starter
72	1624-183	Spacer
73	1624-188	Spacer—Upstop Lever
74	1511-41	Screw (#10-24 x ⅝ Hex Hd.)
75	1616-450	Label—Drive Control
76	39-012	Washer (½ x 15/16 x 1/16)

*Standard Hardware Item—Purchase Locally.

MODEL 2340-1

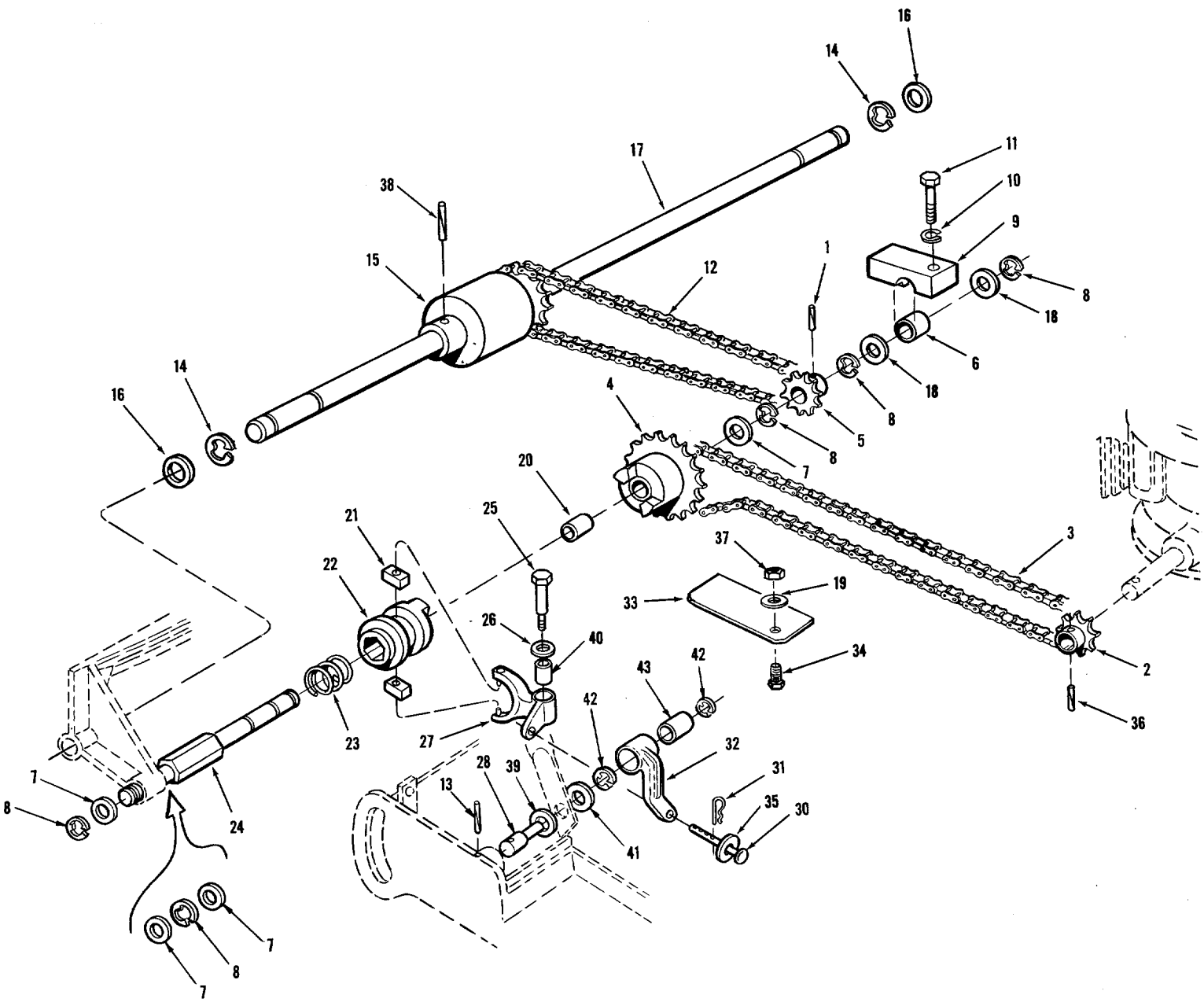

ALL UN-NUMBERED PARTS INTER-CHANGEABLE WITH OPPOSITE SIDE.

For Parts List—See Pg. 9

PARTS LIST

MODEL 2340-1

When ordering parts listed as L. H. or R.H.—determine the left or right hand side of your mower by standing behind the unit as you mow.

REF. NO.	PART NO.	NAME OF PART
1	1548-27	Rollpin
2	1638-46	Sprocket (13 Tooth)
3	1654-25	Chain
4	1121-16	Sprocket Assembly
5	1638-45	Sprocket (13 Tooth)
6	1652-97	Sleeve Bearing (Bronze)
7	1540-25	*Washer (7/16 x 1 x 1/32)
8	1650-44	Retaining Ring
9	1629-64	Retainer
10	1018	*Washer (¼ Split)
11	1513-108	*Bolt (¼-20 x 1⅛)
12	1654-26	Chain
13	1548-15	Rollpin (3/16 x 1)
14	1650-1	Retaining Ring
15	1114-18	Sprocket Flex Coupling
16	1540-22	Washer (19/32 x 1¼ x 1/16)
17	2632-155	Shaft—Rear Drive
18	1540-133	Washer—Special
19	39-027	Washer (#10 Split)
20	1652-98	Sleeve—Bushing (Bronze)
21	1704-6	Shoe
22	2686-7	Clutch—Dog
23	1642-103	Clutch Spring
24	1632-184	Jackshaft
25	1513-104	Bolt—Shoulder
26	1540-134	Washer (5/16 x ⅝ x 1/16)
27	1147-13	Yoke
28	1547-51	Handle Pin
29	1540-86	*Washer (½ x 1 x ⅛)
30	1545-30	Clevis Pin
31	1547-12	Hairpin
32	1132-114	Ass'y—Clutch Bracket
33	1724-18	Plate
34	1095	Screw (10-32 x ½ Phillips)
35	1543-54	Washer—Flat (11/32 x ⅞ x .075)
36	1548-21	Rollpin
37	1534-1	Nut (#10-32 Hex.)
38	1548-11	Rollpin
39	39-012	Washer (½ x 15/16 x 1/16)
40	1652-119	Bearing
41	1540-83	Washer (⅜ x 1 x .035)
42	1650-8	Ring—Retaining
43	1652-118	Bearing

*Standard Hardware Item—Purchased Locally

TO REPLACE BLADE

1. Be sure engine is stopped, disconnect spark plug wire and secure at least 1" away from spark plug.
2. Tip mower on the side and remove the blade and adaptor from engine crank.
3. Remove the blade from the adaptor and replace with a new blade. Reassemble to engine.
4. Resharpening of an old blade should only be attempted by a qualified Service Center. This way proper blade balance will be maintained.

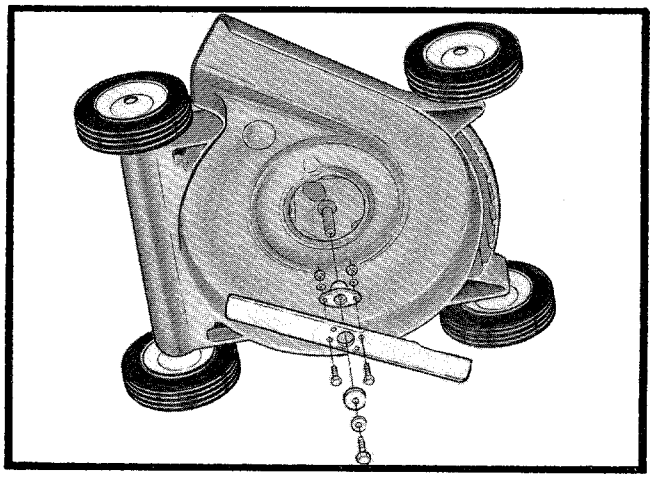

TO ADJUST HEIGHT OF CUT

This mower is equipped with individual wheel adjust levers on the front wheels. The rear wheels are adjusted with the single control. To obtain the proper cutting position desired, it is important that all three wheel adjusters are in the same cutting height.

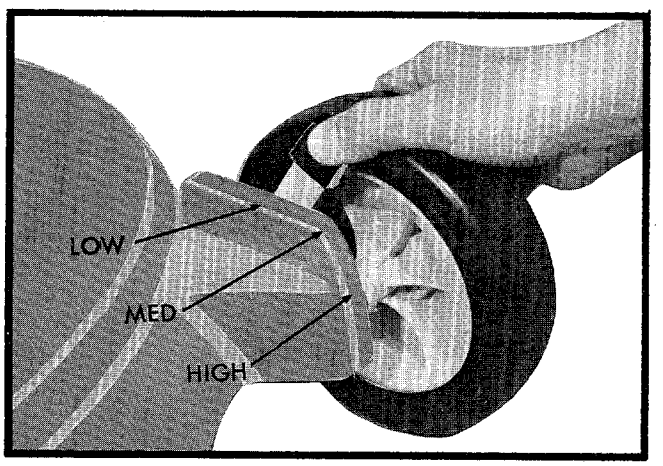

WHEEL ADJUST – FRONT

The front wheel adjust levers can easily be adjusted from low to high cut. Place your hand on the outside of the wheel, spring the adjusting lever, with your thumb, outward until the locating trunnion on the lever is free from the housing. Move the wheel and lever to the height of cut desired. Release the lever, allowing the trunnion to drop into the proper locating hole.

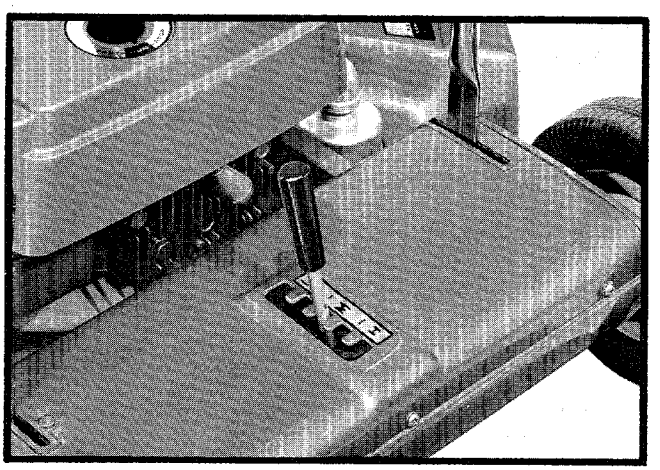

WHEEL ADJUST – REAR

The rear wheel adjust is a single lever action which adjusts both rear wheels at the same time. To adjust press the spring loaded handle out of the detent and move it to the proper detent for the cutting height desired.

The rear adjust mechanism has a counterbalancing spring to help compensate for the weight of mower when moving from high to low position.

CAUTION: NEVER MAKE ADJUSTMENTS WITH THE ENGINE RUNNING.

CLUTCH ADJUSTMENT

After 40 hours of operation the clutch dogs should be checked for proper adjustment. With the handle in the down (disengaged) position the clearance between the dogs should be 1/16 to 1/8 inch. If adjustment is needed—place the handle in an upright position, remove the hairpin from the connecting pin and add another flat washer of comparable size approximately 1/32 thick between the two hardened washers.

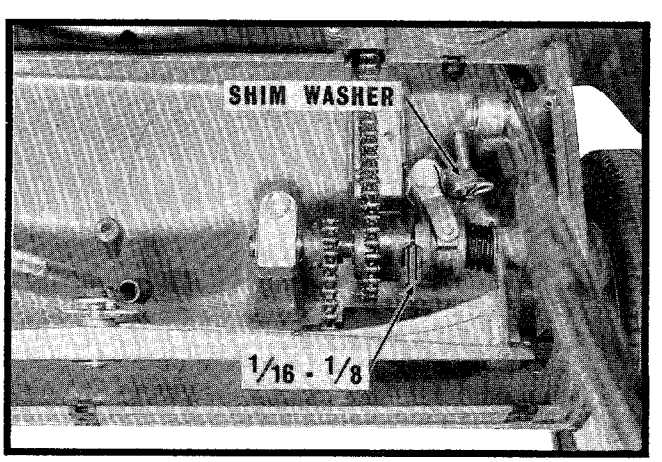

TO USE WASH OUT PORT

After mowing, place hose end (without nozzle) into opening located next to discharge chute. Using moderate water pressure, run engine at full throttle speed for about two minutes. This flushes out accumulations of grass clippings from underneath mower housing. DO NOT wash the top. It may be necessary to tilt the mower back on the rear wheels after washing to drain any water which may have accumulated on the top of the housing.

CAUTION: Never place your hands or feet in the discharge opening or under the blade housing while the engine is running.

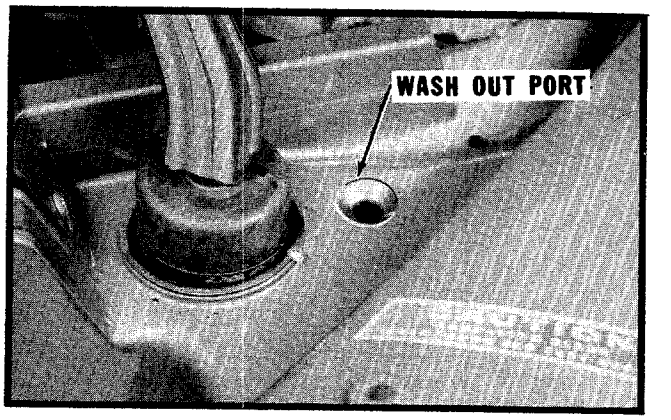

STORAGE

Your mower is equipped with a folding handle for ease of handling during transport or for storage. To place your mower in storage, release the upstop latch as shown and fold the handle assembly forward, loosen the handle knobs and fold the upper handle section back.

Note: For engine storage refer to Page 3 under Maintenance.

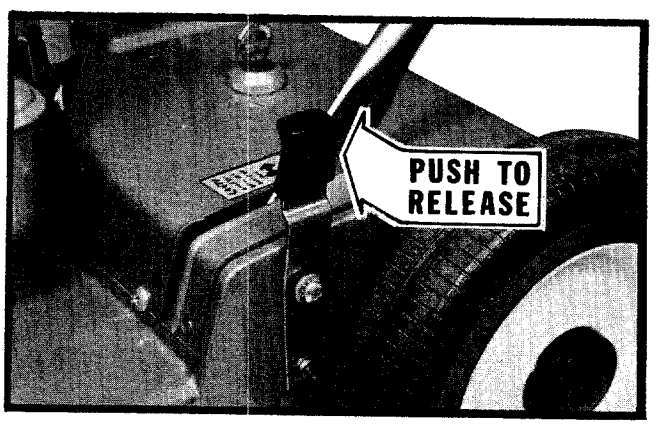

Service Record

DATE	DESCRIPTION

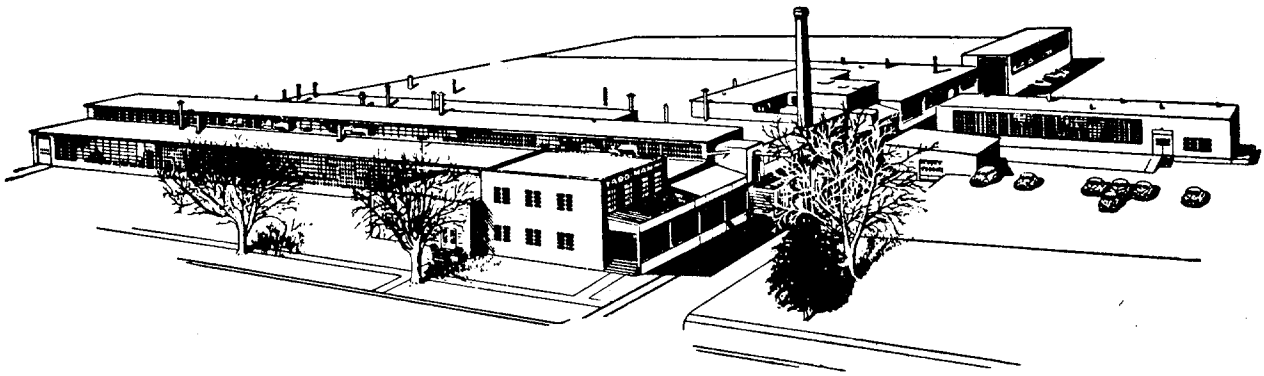

" You are cordially invited to visit our plant at any time."

WARRANTY

This YARD-MAN unit is guaranteed for one year from date of purchase (90 days when used commercially) against defects in workmanship or material under normal use and service.

We agree to repair or replace without charge to the purchaser, including labor, any part proven to be defective within the warranty period, except the Engine which is the responsibility of the Engine manufacturer.

Parts for this YARD-MAN unit will be available for at least ten years from the date of purchase. This warranty will not apply to a unit which has been subjected to—misuse, negligence, an accident, or to a unit which has been altered in any way.

YARD-MAN

JACKSON, MICHIGAN